INNOVATIONS IN OPTICS

Class A+A+A+
LED Benchtop Solar Simulator

LumiSun-50™



*Patent Pending

Features

- Compact, low cost
- AM1.5G Class A+A+A+
  Spectral deviation < 9% 400nm - 1100nm
  < 12% 350nm - 1250nm
  < 15% 300nm - 1250nm
- AM0 at 1 Sun, Class AAA
  Spectral deviation < 16% 300nm - 1200nm
  < 13% 350nm - 1250nm
  < 11% 400nm - 1100nm
  < 13% 350nm - 1300nm
- Long LED Lifetime > 20,000 hours
- Spectral range 350nm-1250nm
- 35 λ individually controlled
- 50 x 50mm highly uniform area (also for individual λ's)
- User-friendly GUI allows individual control of each λ
- RS485 & USB computer connection (Modbus RTU)
- Superior matching to AM1.5 Global Solar Spectrum
- Pre-programmed & user-defined adjustable spectra
- TEC - superior spectral intensity stability
- Ease of alignment by integrated laser diodes

Applications

- PV Cell Testing & Research
- Photochemistry
- Biological
- Phototherapy Research
- Photodynamic Therapy Research
- Materials Testing
- Weathering Tests
- Test Machine Vision sensors
- Test liDAR sensors
- Multispectral, Hyperspectral

The LumiSun™ series includes our new innovative, compact benchtop LED solar simulator that meets IEC 60904-9, 60904-3 Class A+A+A+ for spectral match, nonuniformity of irradiance, and temporal stability. Output power can be varied from 0.1 to 1.2 Suns, and user-friendly operation is supported by advanced GUI, allowing the user to adjust individual wavelengths. Remote digital control is enabled by an RS-485 interface with Modbus RTU communication protocol.

LumiSun-50 incorporates the same Innovations in Optics' [IOI] IP as our OEM solar simulators sold in the thousands to leading PV manufacturers. IOI's patent pending light collection optics and thermal management enable superior temporal stability and uniformity not only for the entire spectrum, but for individual wavelengths as well.

LumiSun-50 provides A+A+A+ illumination over a 50x50mm area, making it ideal for use in research labs to measure the efficiency and spectral response of PV cells, as well as a range of other applications such as photobiology, solar degradation, and other sunlight research studies. Unlike bulky, expensive, environmentally unfriendly lamp-based units, LumiSun-50 employs a multi-wavelength array of long lifetime LEDs that are driven independently and can be user-controlled to set spectra.

The LED light source is thermoelectrically cooled and contained within an air-cooled housing that can rotate the angle of the illumination plane. The optimal working distance is adjusted by converging a pair of red dots from integrated laser pointers.

10-K Gill Street, Woburn, MA 01801
p: (781) 933-4477
www.innovationsinoptics.com
sales@innovationsinoptics.com
Copyright © 2026 Innovations in Optics. All rights reserved.
LumiSun-50™ Patent Pending

LumiSun-50™ Solar Simulator Pre-programmed Spectrum

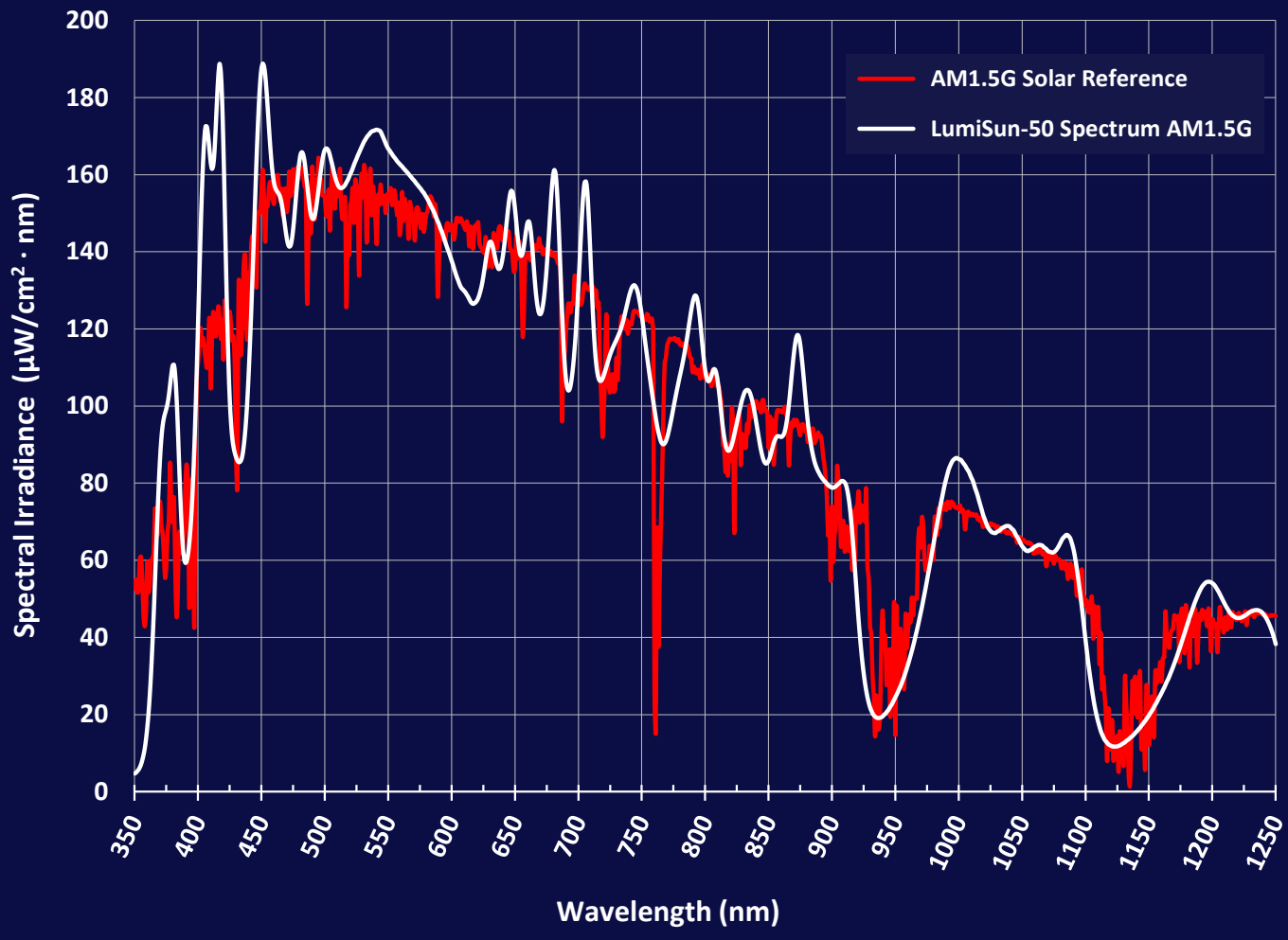

Table 1: Spectral Match Values

Wavelength Range (nm)	Measured Irradiance (W/m²)	Percentage of Total Irradiance (%)	Spectral Match to Spectral Bins (%)
300 - 470	121.15	14.68	87.5 - 112.5
471- 560	143.97	17.45	87.5 - 112.5
561 - 660	149.49	18.11	87.5 - 112.5
661 - 770	135.71	16.44	87.5 - 112.5
771 - 920	144.75	17.54	87.5 - 112.5
921 - 1200	130.19	15.78	87.5 - 112.5

10-K Gill Street, Woburn, MA 01801
p: (781) 933-4477
www.innovationsinoptics.com
sales@innovationsinoptics.com
Copyright © 2026 Innovations in Optics. All rights reserved.
LumiSun-50™ Patent Pending

LumiSun-50™ Specifications

PARAMETER	SPECIFICATION	COMMENT
Solar Simulator Class	A+A+A+	IEC 60904-9 Ed. 3
Irradiance Range of Solar Simulator	0.1 to 1.2 Suns[2]	350 - 1250nm
Illumination Area	50 x 50mm	At working distance 126.04mm
Expected Lifetime	> 20,000 Hours	L70
Operation Modes	CW or Pulsed	
Spectral Deviation[1]	≤ 15%; ≤ 20%; ≤ 9%	300 - 1200nm; 350 - 1250nm; 400-1100nm
Spectral Coverage[2]	100%; 98%	350 - 1250nm; 300 - 1250nm
Non-Uniformity[3]	A+ < 1%	
Instability (16 hours @ 1 Sun[2])[4]	A+ < 1%	
Temporal Instability (STI)[4]	< 0.1%	50Hz sampling over 3s; Exceeds A+
Long-Term Temporal Instability (LTI)[4]	A+ < 1%	1,000 hours
Spectral Match (IEC binning)	A+	300 - 1200nm per IEC spec
Working Distance (WD)	126.04mm	Source exit aperture to test plane
Maximum Angle Subtended at (WD)	Half angle 12.3°	Full cone angle 24.6°
Warm Up Time for Stable Irradiance	< 1s	From enable to within 1% final output (on state)
Temperature Control of LEDs	Yes	With TEC module' set points at 35° and 40°
Operating Environment	20° to 40°	< 85%, relative humidity, non-condensing
Thermal Sensors	Safety shutdown	LED and driver PCBs. Controlled by software
PC Communication	RS485 and USB	RS485 connector dual RJ45, USB (type B)
RS485 Communication Protocol	MODBUS RTU	19.2 kBd - 230.4 kBd
USB Communication Protocol	MODBUS RTU	via COM port redirection
Trigger High to Stable Calibrated Output	1ms	Maximum (includes rise time)
System Width (Including screw heads)	17.88 cm	See ICD
System Depth	15.41 cm	See ICD (17.9 cm with mount pivot)
System Height (Image plane to top)	28.97 cm	See ICD (16.36 cm enclosure only)
Weight	3.2 kg	Without rack and pinion mounting hardware
Electric Voltage Input	24 VDC +/- 5%	< 100W power consumption
Over Temperature Response	Software control	

10-K Gill Street, Woburn, MA 01801
p: (781) 933-4477
www.innovationsinoptics.com
sales@innovationsinoptics.com
Copyright © 2026 Innovations in Optics. All rights reserved.
LumiSun-50™ Patent Pending

LumiSun-50™ Specifications (cont.)

[1] Spectral deviation relative to AM1/5G calculated according to formulas stated in IEC 60904-9 edition 2, section 3.13, and process in section 5.6, replacing wavelength range for that in specification description. to be 1nm for these calculations

[2] Intensity value in suns calculated according to IEC 60904-3 ed. 4 solar AM1.5 Global spectral intensity integrated over the relevant spectral band as defined by the spectral active range of 300-1250nm with 1 sun having an equivalent total integrated power over that spectral band to the reference solar spectrum.

[3] Spectral Coverage relative to AM1.5 calculated according to formulas stated in IEC 60904-9 edition 3, section 3.12, and process in section 5.5, replacing wavelength range for that in specification description. to be 1nm for these calculations

[4] Instability calculated based on IEC 60904-9 ed. 3 formula as (max-min)/(max+min)

LumiSun-50™ Uniformity

0.995	0.997	0.998	0.997	0.997	0.998	0.996	0.992
0.995	1.000	1.000	0.998	0.997	0.999	0.996	0.993
0.995	0.999	0.997	0.996	0.995	0.998	0.998	0.993
0.992	0.996	0.993	0.993	0.991	0.996	0.995	0.990
0.993	0.997	0.995	0.993	0.994	0.998	0.996	0.991
0.994	0.999	0.996	0.996	0.995	0.999	0.996	0.991
0.994	0.997	0.997	0.997	0.996	0.999	0.995	0.989
0.995	0.997	0.997	0.995	0.994	0.996	0.991	0.985

A+ Measured non-uniformity 0.76% over entire illumination field

Also excellent for each wavelength independently

10-K Gill Street, Woburn, MA 01801
p: (781) 933-4477
www.innovationsinoptics.com
sales@innovationsinoptics.com
Copyright © 2026 Innovations in Optics. All rights reserved.
LumiSun-50™ Patent Pending

Dimensions

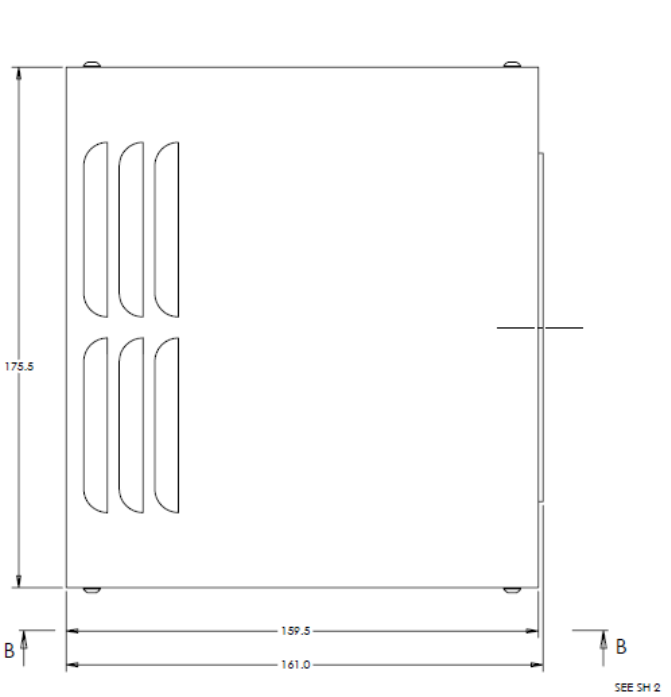

TOP VIEW

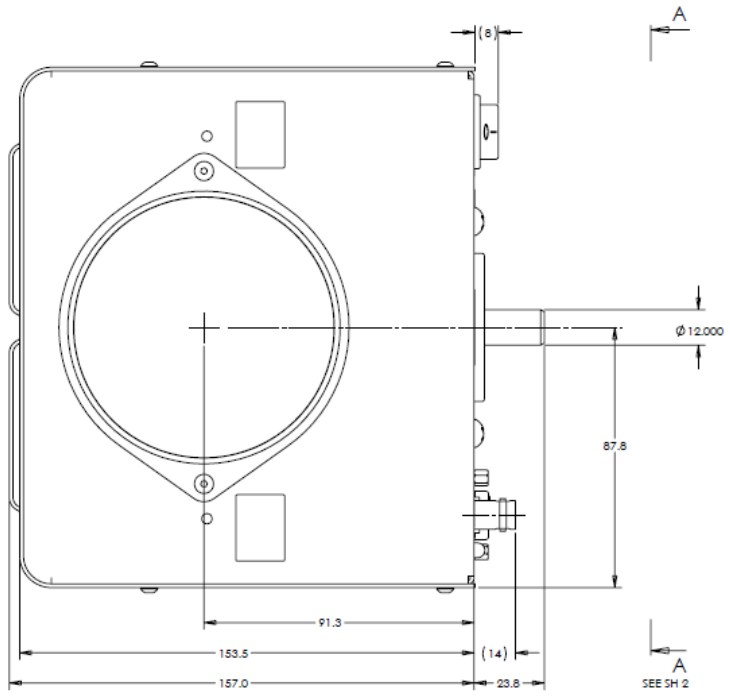

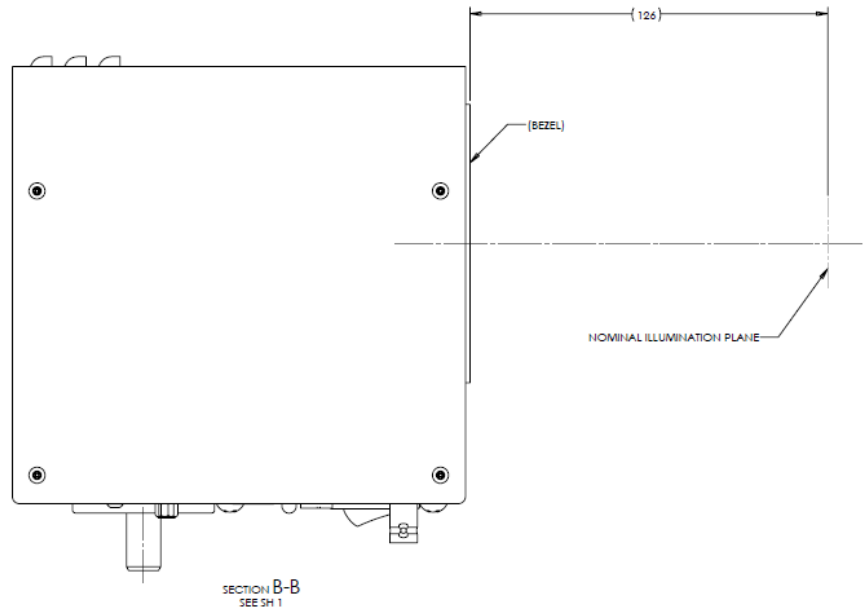

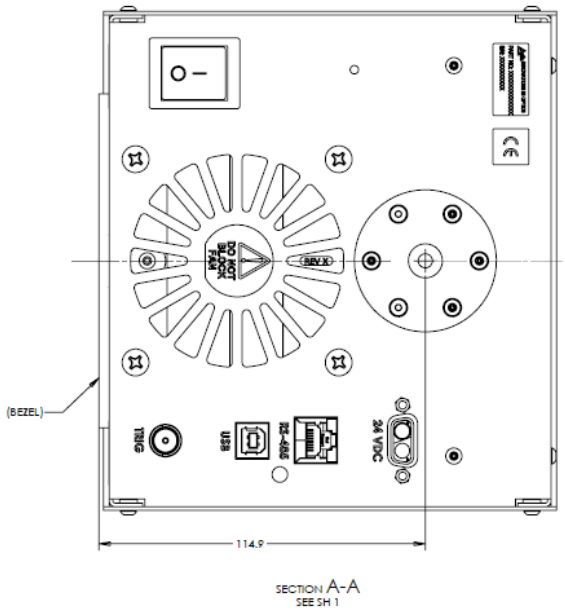

10-K Gill Street, Woburn, MA 01801
p: (781) 933-4477
www.innovationsinoptics.com
sales@innovationsinoptics.com

Copyright © 2026 Innovations in Optics. All rights reserved.
LumiSun-50™ Patent Pending

LumiSun-50™ Additional Views

- The USB connector (square “B” type) is located on the rear panel
- A standard USB A/B cable is required to communicate with LumiSun
- Communication is handled via Modbus RTU or GUI
- RJ45 connector available for communication with multiple units
- An external power source supplies DC power to LumiSun
- Alignment to WD is accomplished with a pair of red laser pointers
- Flexible mounting and orientation enable adjustment
- External remote on/off triggering capability included

USB-B connector
RS-485 (dual RJ45)
24VDC electrical input
Trigger input



10-K Gill Street, Woburn, MA 01801
p: (781) 933-4477
www.innovationsinoptics.com
sales@innovationsinoptics.com
Copyright © 2026 Innovations in Optics. All rights reserved.
LumiSun-50™ Patent Pending